DIST. : ASSY– QUAL. CTL. MAIN CABLE ENG. PURCH. PRESS TOOLROOM

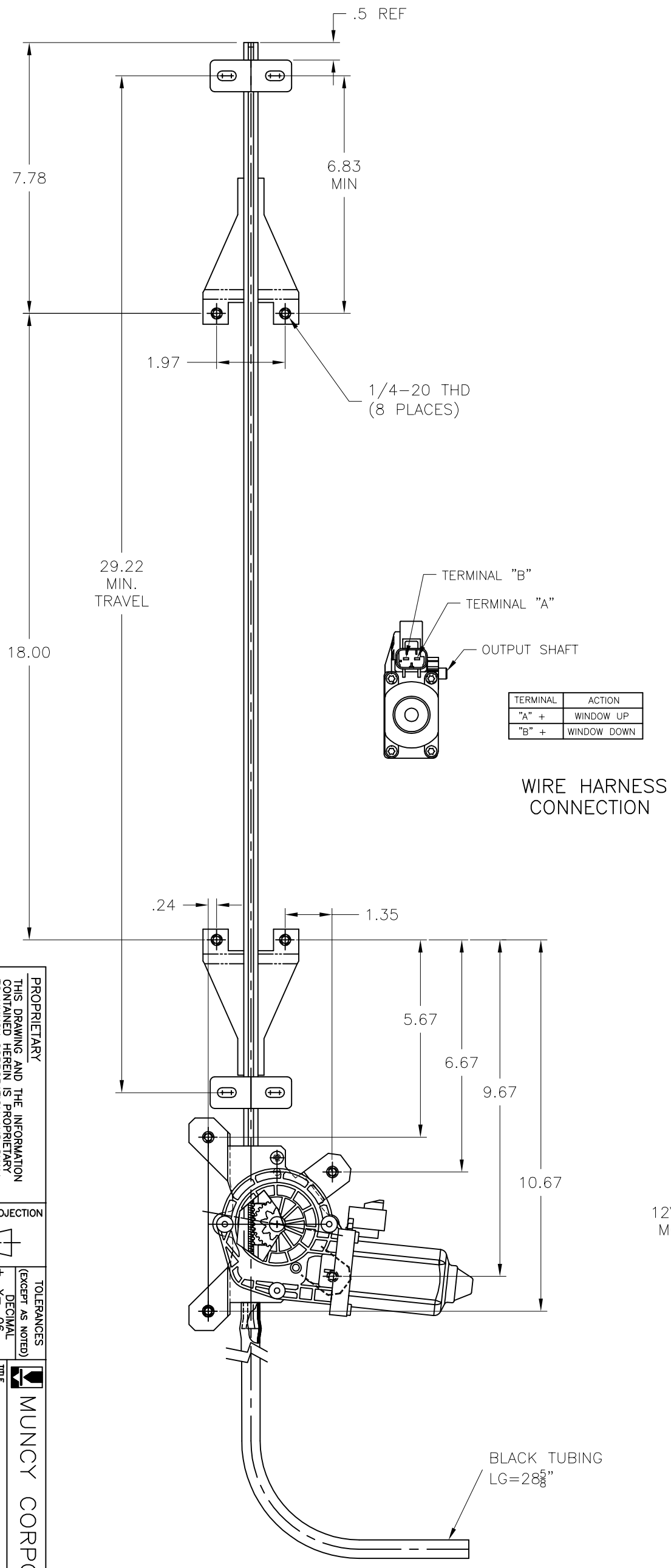

TERMINAL	ACTION
"A" +	WINDOW UP
"B" +	WINDOW DOWN

WIRE HARNESS
CONNECTION

SAMPLE DRAWING
DIMENSIONS FOR REFERENCE ONLY

PROPRIETARY
THIS DRAWING AND THE INFORMATION CONTAINED HEREIN IS PROPRIETARY TO MUNCY CORPORATION AND SHALL NOT BE REPRODUCED, COPIED, OR DISCLOSED IN WHOLE OR IN PART FOR THE PURPOSE OF MANUFACTURING WITHOUT THE WRITTEN PERMISSION OF MUNCY CORP.

DO NOT SCALE DRAWING

THIRD ANGLE PROJECTION

TOLERANCES (EXCEPT AS NOTED)
DECIMAL ± .X= .06 ± .XX= .04 ± .XXX= .020
FRACTIONAL ± 1/32
ANGULAR ± 1°

MUNCY CORPORATION

TITLE REGULATOR – CABLE, ELEC., LH
DRAWN BY JMW
DATE 9–7–04
APROVAL GRH
PLOT SCALE –
WHERE USED –
MATERIAL SEE NOTE
DRAWING NO. –
CAD FILE NO.: ELEC CBL STRT ST

REV	DATE	DESCRIPTION	BY	CK
.	.	.	.	.